Work Order ID 74686

Wednesday, October 05, 2011 10:24:30 AM

Item ID: D407-667-105 **Accept** **Setup Start**

Revision ID:

Item Name: Crosstube Fwd **Stop**

Start Date: 10/5/2011 **Start Qty:** 1.00 **Cust Item ID:**

Required Date: 10/21/2011 **Req'd Qty:** 1.00 **Customer:**

Reference:

Approvals: **Process Plan:** M.L.J **Date:** 11/10/05 **Tooling:** _____ **Date:** _____ **Run Start**

QC: _____ **Date:** _____ **SPC (Y/N):** _____ **Date:** _____ **Stop**

Sequence ID/ Work Center ID	Operation Description	Set Up/ Run Hours	Tool ID	Tool #	Plan Code	Accept Qty	Reject Qty	Reject Number	Insp. Stamp
Draw Nbr	**Revision Nbr**								
D407-667-145	Rev C (DEO)								
DSI9565	A								
100	DOCUMENT CONTROL	0.00							
DC	**Memo**	0.00							
Document Control	Photocopy bluefile and create labels as per PPP D407-667-105 CHG004								
110	Packaging	0.00							
Packaging	**Memo**	0.00							
Packaging									

for MLJ 11-10-19

8 11/10/19

JW/mo 11-10-13

D407667-105 B74686

Dart Aerospace Ltd

W/O:	WORK ORDER CHANGES						
DATE	STEP	PROCEDURE CHANGE	By	Date	Qty	Approval Chief Eng / Prod Mgr	Approval QC Inspector

Part No: _____ **PAR #:** _____ **Fault Category:** _____ **NCR:** Yes No **DQA:** _____ **Date:** _____

Resolution: _____ **Disposition:** _____ **QA: N/C Closed:** _____ **Date:** _____

NCR:	WORK ORDER NON-CONFORMANCE (NCR)							
			Corrective Action Section B					
DATE	STEP	Description of NC Section A	Initial Chief Eng	Action Description Chief Eng	Sign & Date	Verification Section C	Approval Chief Eng	Approval QC Inspector

NOTE: Date & initial all entries

H:\fFORMS\Quality Assurance\approved QA\NCRWO RevE

Work Order ID 74686

Wednesday, October 05, 2011 10:24:30 AM

Item ID: D407-667-105 **Accept** **Setup Start**

Revision ID:

Item Name: Crosstube Fwd **Stop**

Start Date: 10/5/2011 **Start Qty:** 1.00 **Cust Item ID:**

Required Date: 10/21/2011 **Req'd Qty:** 1.00 **Customer:**

Reference:

Approvals: **Process Plan:** _____ **Date:** _____ **Tooling:** _____ **Date:** _____ **Run Start**

QC: _____ **Date:** _____ **SPC (Y/N):** _____ **Date:** _____ **Stop**

Sequence ID/ Work Center ID	Operation Description	Set Up/ Run Hours	Tool ID	Tool #	Plan Code	Accept Qty	Reject Qty	Reject Number	Insp. Stamp
120		0.00							
CNC Bend 2	BENDING MACHINE - CROSSTUBES								
CNC Alpha 160 Bender	**Memo**	0.00	JW/MO			11-10-13			
	Bend tube as per Dwg D407-667-145 using CNC bender program 407-fw								
130	QC15- Crosstube Dimensional Check	0.00							
QC	**Memo**	0.00	S 11/10/13						
Quality Control									

Dart Aerospace Ltd

W/O:		WORK ORDER CHANGES					
DATE	STEP	PROCEDURE CHANGE	By	Date	Qty	Approval Chief Eng / Prod Mgr	Approval QC Inspector

Part No: _____ **PAR #:** _____ **Fault Category:** _____ **NCR:** Yes No **DQA:** _____ **Date:** _____

Resolution: _____ **Disposition:** _____ **QA: N/C Closed:** _____ **Date:** _____

NCR:		WORK ORDER NON-CONFORMANCE (NCR)						
			Corrective Action Section B					
DATE	STEP	Description of NC Section A	Initial Chief Eng	Action Description Chief Eng	Sign & Date	Verification Section C	Approval Chief Eng	Approval QC Inspector

NOTE: Date & initial all entries

H:\fFORMS\Quality Assurance\approved QA\NCRWO RevE

Work Order ID 74686

Wednesday, October 05, 2011 10:24:30 AM

Item ID: D407-667-105 **Accept** **Setup Start** **Stop**

Revision ID:

Item Name: Crosstube Fwd

Start Date: 10/5/2011 **Start Qty:** 1.00 **Cust Item ID:**

Required Date: 10/21/2011 **Req'd Qty:** 1.00 **Customer:**

Reference:

Run Start **Stop**

Approvals: **Process Plan:** _____ **Date:** _____ **Tooling:** _____ **Date:** _____

QC: _____ **Date:** _____ **SPC (Y/N):** _____ **Date:** _____

Sequence ID/ Work Center ID	Operation Description	Set Up/ Run Hours	Tool ID	Tool #	Plan Code	Accept Qty	Reject Qty	Reject Number	Insp. Stamp
140	Crosstubes	0.00							
Crosstubes		0.00							
Crosstubes									

Memo

1- scrib batch # inside of cuff

2-Drill pilot holes in tube using drill Jig DT8541 & DT8542 as per Dwg D407-667-145. Drill all (3) top holes use drill table jig DT8577 hole #1,#11 to set up towers, as per QSI0010.

3-Drill and Ream all holes in tube to finish size using drill Jig DT8541 & DT8542 as per Dwg D407-667-145 Check dimensions between holes on all four sides.

4-Flip tube and switch drilling Jigs from right to left, left to right. Locate Jigs off existing holes using "T" pins.

5-Drill pilot holes using drill Jig DT8541 & DT8542 as per Dwg 407-667-145. Drill only the top (2) holes.

6-Drill & ream the top (2) holes to finish size using drill Jig DT8541 & DT8542 as per Dwg D407-667-145

7-Drill Fwd rivet holes using drill Jig DT8787FWD as per Dwg D206-667-145.Note: Fwd side has 3x top holes.

8-Drill Aft rivet holes using drill Jig DT8787AFT as per Dwg D407-667-145.

9-C'sink holes as per Dwg D407-667-145. Allow rivet to sit below surface to compensate for paint.

10 -Deburr & inspect for surface damage. Repair damage within limits as per

JW/MD 11-10-13

MO/JW 11-10-13

Dart Aerospace Ltd

W/O:		WORK ORDER CHANGES					
DATE	STEP	PROCEDURE CHANGE	By	Date	Qty	Approval Chief Eng / Prod Mgr	Approval QC Inspector

Part No: _____ **PAR #:** _____ **Fault Category:** _____ **NCR:** Yes No **DQA:** _____ **Date:** _____

Resolution: _____ **Disposition:** _____ **QA: N/C Closed:** _____ **Date:** _____

NCR:		WORK ORDER NON-CONFORMANCE (NCR)						
DATE	STEP	Description of NC Section A	Corrective Action Section B			Verification Section C	Approval Chief Eng	Approval QC Inspector
			Initial Chief Eng	Action Description Chief Eng	Sign & Date			

NOTE: Date & initial all entries

H:\fFORMS\Quality Assurance\approved QA\NCRWO RevE

Work Order ID 74686

Wednesday, October 05, 2011 10:24:30 AM

Item ID: D407-667-105 **Accept** **Setup Start** **Stop**

Revision ID:

Item Name: Crosstube Fwd

Start Date: 10/5/2011 **Start Qty:** 1.00 **Cust Item ID:**

Required Date: 10/21/2011 **Req'd Qty:** 1.00 **Customer:**

Reference:

Approvals: **Process Plan:** _____ **Date:** _____ **Tooling:** _____ **Date:** _____ **Run Start** **Stop**

QC: _____ **Date:** _____ **SPC (Y/N):** _____ **Date:** _____

Sequence ID/ Work Center ID	Operation Description	Set Up/ Run Hours	Tool ID	Tool #	Plan Code	Accept Qty	Reject Qty	Reject Number	Insp. Stamp
	Dwg D407-667-145								
150 HandFXtube Hand Finishing Crosstubes	Crosstubes Chemical Conversion	0.00	MO/JW		11/10/13				
	Memo	0.00							
160 QC Quality Control	QC3- Inspect Part Finish	0.00	Sullivan						
	Memo	0.00							
170 QC Quality Control	QC5- Inspect part completeness to step on W/O	0.00	Sullivan						
	Memo	0.00							

Dart Aerospace Ltd

W/O:		WORK ORDER CHANGES					
DATE	STEP	PROCEDURE CHANGE	By	Date	Qty	Approval Chief Eng / Prod Mgr	Approval QC Inspector

Part No: _____ **PAR #:** _____ **Fault Category:** _____ **NCR:** Yes No **DQA:** _____ **Date:** _____

Resolution: _____ **Disposition:** _____ **QA: N/C Closed:** _____ **Date:** _____

NCR:		WORK ORDER NON-CONFORMANCE (NCR)						
DATE	STEP	Description of NC Section A	Corrective Action Section B			Verification Section C	Approval Chief Eng	Approval QC Inspector
			Initial Chief Eng	Action Description Chief Eng	Sign & Date			

NOTE: Date & initial all entries

H:\fFORMS\Quality Assurance\approved QA\NCRWO RevE

Work Order ID 74686

Wednesday, October 05, 2011 10:24:30 AM

Item ID: D407-667-105 **Accept** **Setup Start**

Revision ID: **Stop**

Item Name: Crosstube Fwd

Start Date: 10/5/2011 **Start Qty:** 1.00 **Cust Item ID:**

Required Date: 10/21/2011 **Req'd Qty:** 1.00 **Customer:**

Reference:

Approvals: **Process Plan:** _____ **Date:** _____ **Tooling:** _____ **Date:** _____ **Run Start**

QC: _____ **Date:** _____ **SPC (Y/N):** _____ **Date:** _____ **Stop**

Sequence ID/ Work Center ID	Operation Description	Set Up/ Run Hours	Tool ID	Tool #	Plan Code	Accept Qty	Reject Qty	Reject Number	Insp. Stamp
180	Outsource process - NDT per QSI038 4.1	0.00							
Outsource2	**Memo**	0.00							
Outsource process - NDT	OUTSIDE SERVICE -CROSSTUBES Liquid Penetrant Inspection as per QSI 038 Or Issue P/O: 15157 LPI as per ASTM 1417 Level 2 Attach copy of NDT results to work order						11-10-14		
190	Packaging	0.00							
Packaging	**Memo**	0.00							
Packaging	Inspect for transit damage Ensure copy of NDT results attached to work order.						11/10/14 (1)		
200	QC5- Inspect part completeness to step on W/O	0.00							
QC	**Memo**	0.00							
Quality Control	Inspect for damage & ensure results are as per Dwg D206-667-145						RT 11-10-14		

Dart Aerospace Ltd

W/O:		WORK ORDER CHANGES					
DATE	STEP	PROCEDURE CHANGE	By	Date	Qty	Approval Chief Eng / Prod Mgr	Approval QC Inspector

Part No: _____ **PAR #:** _____ **Fault Category:** _____ **NCR:** Yes No **DQA:** _____ **Date:** _____

Resolution: _____ **Disposition:** _____ **QA: N/C Closed:** _____ **Date:** _____

NCR:		WORK ORDER NON-CONFORMANCE (NCR)						
DATE	STEP	Description of NC Section A	Corrective Action Section B			Verification Section C	Approval Chief Eng	Approval QC Inspector
			Initial Chief Eng	Action Description Chief Eng	Sign & Date			

NOTE: Date & initial all entries

H:\fFORMS\Quality Assurance\approved QA\NCRWO RevE

Work Order ID 74686

Wednesday, October 05, 2011 10:24:30 AM

Item ID: D407-667-105 **Accept** **Setup Start**

Revision ID:

Item Name: Crosstube Fwd **Stop**

Start Date: 10/5/2011 **Start Qty:** 1.00 **Cust Item ID:**

Required Date: 10/21/2011 **Req'd Qty:** 1.00 **Customer:**

Reference:

Approvals: **Process Plan:** _____ **Date:** _____ **Tooling:** _____ **Date:** _____ **Run Start**

QC: _____ **Date:** _____ **SPC (Y/N):** _____ **Date:** _____ **Stop**

Sequence ID/ Work Center ID	Operation Description	Set Up/ Run Hours	Tool ID	Tool #	Plan Code	Accept Qty	Reject Qty	Reject Number	Insp. Stamp
210	SprayPaint	0.00							
SprayPaint						ZT	11	- 10	-15
Spray Painting	**Memo**	0.00							
	1-Prime inside and outside crosstube as per QSI 005 4.2								
	2-Paint outside crosstube with White Imron as per QSI 005 4.2								
	PRIME: Start Time: 7:00 Fininsh Time: 8:00								
	PAINT: Start Time: 12:00 Finish Time: 1:00								
220	QC14- Inspect Spray Paint	0.00							
QC							11	10	17
Quality Control	**Memo**	0.00							
	Then,Wrap in plastic bag to protect from scratches								

Dart Aerospace Ltd

W/O:		WORK ORDER CHANGES					
DATE	STEP	PROCEDURE CHANGE	By	Date	Qty	Approval Chief Eng / Prod Mgr	Approval QC Inspector

Part No: _____ **PAR #:** _____ **Fault Category:** _____ **NCR:** Yes No **DQA:** _____ **Date:** _____

Resolution: _____ **Disposition:** _____ **QA: N/C Closed:** _____ **Date:** _____

NCR:		WORK ORDER NON-CONFORMANCE (NCR)						
DATE	STEP	Description of NC Section A	Corrective Action Section B			Verification Section C	Approval Chief Eng	Approval QC Inspector
			Initial Chief Eng	Action Description Chief Eng	Sign & Date			

NOTE: Date & initial all entries

H:\fFORMS\Quality Assurance\approved QA\NCRWO RevE

Work Order ID 74686

Wednesday, October 05, 2011 10:24:30 AM

Item ID: D407-667-105 **Accept** **Setup Start**

Revision ID: **Stop**

Item Name: Crosstube Fwd

Start Date: 10/5/2011 **Start Qty:** 1.00 **Cust Item ID:**

Required Date: 10/21/2011 **Req'd Qty:** 1.00 **Customer:**

Reference:

Run Start

Approvals: **Process Plan:** _____ **Date:** _____ **Tooling:** _____ **Date:** _____ **Stop**

QC: _____ **Date:** _____ **SPC (Y/N):** _____ **Date:** _____

Sequence ID/ Work Center ID	Operation Description	Set Up/ Run Hours	Tool ID	Tool #	Plan Code	Accept Qty	Reject Qty	Reject Number	Insp. Stamp
230		0.00							
Crosstubes	Crosstubes								
Crosstubes	**Memo**	0.00							
Crosstubes	1-Abrade mating surfaces of support and crosstube with 400 grit sandpaper, clean the area with 4105S wash 'n' wipe								
	2-Install supports with Proseal 890 per DSI9565 and QSI 015 A/R Proseal 890 Batch: 118234								
	3- Torque bolts as per dwg								
	4-Install nut plates as per Dwg D407-667-145. Touch-up rivet heads with Imron paint.								
240	QC5- Inspect part completeness to step on W/O	0.00							
QC	**Memo**	0.00							
Quality Control									

11-10-18

11-10-18

11/10/19 (1)

Dart Aerospace Ltd

W/O:		WORK ORDER CHANGES					
DATE	STEP	PROCEDURE CHANGE	By	Date	Qty	Approval Chief Eng / Prod Mgr	Approval QC Inspector

Part No: _____ **PAR #:** _____ **Fault Category:** _____ **NCR:** Yes No **DQA:** _____ **Date:** _____

Resolution: _____ **Disposition:** _____ **QA: N/C Closed:** _____ **Date:** _____

NCR:		WORK ORDER NON-CONFORMANCE (NCR)						
DATE	STEP	Description of NC Section A	Corrective Action Section B			Verification Section C	Approval Chief Eng	Approval QC Inspector
			Initial Chief Eng	Action Description Chief Eng	Sign & Date			

NOTE: Date & initial all entries

H:\fFORMS\Quality Assurance\approved QA\NCRWO RevE

Work Order ID 74686

Wednesday, October 05, 2011 10:24:30 AM

Item ID: D407-667-105 **Accept** **Setup Start** **Stop**

Revision ID:

Item Name: Crosstube Fwd

Start Date: 10/5/2011 **Start Qty:** 1.00 **Cust Item ID:**

Required Date: 10/21/2011 **Req'd Qty:** 1.00 **Customer:**

Reference:

Run Start **Stop**

Approvals: **Process Plan:** _____ **Date:** _____ **Tooling:** _____ **Date:** _____

QC: _____ **Date:** _____ **SPC (Y/N):** _____ **Date:** _____

Sequence ID/ Work Center ID	Operation Description	Set Up/ Run Hours	Tool ID	Tool #	Plan Code	Accept Qty	Reject Qty	Reject Number	Insp. Stamp
250	Pick Kit	0.00				11/10/15			
Packaging	**Memo**	0.00							
Packaging									
260	QC4- 100% Inspect kits for completeness	0.00							
QC	**Memo**	0.00							
Quality Control									
270	Packaging	0.00							
Packaging	**Memo**	0.00							
Packaging	Identify and pack for shipping as per PPP D407-667-105 Location:_____ PPP Rev:_____								

Dart Aerospace Ltd

W/O:		WORK ORDER CHANGES					
DATE	STEP	PROCEDURE CHANGE	By	Date	Qty	Approval Chief Eng / Prod Mgr	Approval QC Inspector

Part No: _____ **PAR #:** _____ **Fault Category:** _____ **NCR:** Yes No **DQA:** _____ **Date:** _____

Resolution: _____ **Disposition:** _____ **QA: N/C Closed:** _____ **Date:** _____

NCR:		WORK ORDER NON-CONFORMANCE (NCR)						
DATE	STEP	Description of NC Section A	Corrective Action Section B			Verification Section C	Approval Chief Eng	Approval QC Inspector
			Initial Chief Eng	Action Description Chief Eng	Sign & Date			

NOTE: Date & initial all entries

H:\fFORMS\Quality Assurance\approved QA\NCRWO RevE

Work Order ID 74686

Wednesday, October 05, 2011 10:24:30 AM

Item ID: D407-667-105 **Accept** **Setup Start**

Revision ID: **Stop**

Item Name: Crosstube Fwd

Start Date: 10/5/2011 **Start Qty:** 1.00 **Cust Item ID:**

Required Date: 10/21/2011 **Req'd Qty:** 1.00 **Customer:**

Reference:

Run Start

Approvals: **Process Plan:** _____ **Date:** _____ **Tooling:** _____ **Date:** _____

Stop

QC: _____ **Date:** _____ **SPC (Y/N):** _____ **Date:** _____

Sequence ID/ Work Center ID	Operation Description	Set Up/ Run Hours	Tool ID	Tool #	Plan Code	Accept Qty	Reject Qty	Reject Number	Insp. Stamp
280	QC21- Final Inspection - Work Order Release	0.00							
QC Quality Control	**Memo**	0.00							

11/10/24

JMF

11-10-19

Dart Aerospace Ltd

W/O:		WORK ORDER CHANGES					
DATE	STEP	PROCEDURE CHANGE	By	Date	Qty	Approval Chief Eng / Prod Mgr	Approval QC Inspector

Part No: _____ **PAR #:** _____ **Fault Category:** _____ **NCR:** Yes No **DQA:** _____ **Date:** _____

Resolution: _____ **Disposition:** _____ **QA: N/C Closed:** _____ **Date:** _____

NCR:		WORK ORDER NON-CONFORMANCE (NCR)						
DATE	STEP	Description of NC Section A	Corrective Action Section B			Verification Section C	Approval Chief Eng	Approval QC Inspector
			Initial Chief Eng	Action Description Chief Eng	Sign & Date			

NOTE: Date & initial all entries

H:\fFORMS\Quality Assurance\approved QA\NCRWO RevE

Picklist Print

Wednesday, October 05, 2011 10:24:39 AM

Work Order ID: 74686

Parent Item: D407-667-105

Parent Item Name: Crosstube Fwd

Start Date: 10/5/2011 **Required Date:** 10/21/2011

Start Qty: 1.00 **Required Qty:** 1.00

Comments:
IPP Rev:F 05.09.01Add holes for compatibility with Bell Skidtubes□KJ/JLM
IPP Rev:G 08-05-16 chg QC6 to QC15 DD verified by:EC
IPP Rev:H 08-06-03 update as per DSI9415 (ECN1198) DD verified by:ec
IPP Rev:I 08-07-14 add (scribe inside of tube) seq.6 DD verified by:EC
IPP Rev:J 08-07-28 update as per (par 08-013) DD verified by:EC
IPP Rev K 09.01.06 ECN 08-562 EC verified by:DD IPP REV:L
11.08.05 PER ECN 11-615 DD VERF:EC

Component Item ID/ Item Name	Replacement Item ID	Mfg/ Purch	Bin Item	Primary Location	Last Location	Route Seq ID	Unit of Measure	Qty on Hand	Qty per Kit	Total Qty	Qty Issued	Date Issued	Status
D407-667-105TRN		Manufactured	No			110	Each	2.0000	1	1			
Crosstube Turning Detail													

Location	Loc Qty	Loc Code
LG	2	
73254	1	
73255	1	

0 JW 11-10-12

D2873-043		Manufactured	No			230	Each	32.0000	2	2			
Nut Plate Assembly													

RK 11-10-15

Location	Loc Qty	Loc Code
LG	12	
72644	12	
LG052	20	
73605	20	

x 2

Dart Aerospace Ltd

W/O:		WORK ORDER CHANGES					
DATE	STEP	PROCEDURE CHANGE	By	Date	Qty	Approval Chief Eng / Prod Mgr	Approval QC Inspector

Part No: _____ **PAR #:** _____ **Fault Category:** _____ **NCR:** Yes No **DQA:** _____ **Date:** _____

Resolution: _____ **Disposition:** _____ **QA: N/C Closed:** _____ **Date:** _____

NCR:		WORK ORDER NON-CONFORMANCE (NCR)						
DATE	STEP	Description of NC Section A	Corrective Action Section B			Verification Section C	Approval Chief Eng	Approval QC Inspector
			Initial Chief Eng	Action Description Chief Eng	Sign & Date			

NOTE: Date & initial all entries

H:\fFORMS\Quality Assurance\approved QA\NCRWO RevE

Picklist Print

Wednesday, October 05, 2011 10:24:39 AM

Work Order ID: 74686

Parent Item: D407-667-105

Parent Item Name: Crosstube Fwd

Start Date: 10/5/2011 **Required Date:** 10/21/2011

Start Qty: 1.00 **Required Qty:** 1.00

D2873-045	Manufactured	No	230	Each	25.0000	2	2	RT 11-10-15

Nut Plate Assembly

Location	Loc Qty	Loc Code	
LG	5		
71983	1		
72562	4		
LG052	20		
73529	20		x2

D2891-1	Manufactured	No	230	Each	27.0000	2	2	RT 11-10-18

2.25 Support

Location	Loc Qty	Loc Code	
LG	7		
71991	7		x2
LG052	20		
72822	20		

D3595-063-395	Manufactured	No	230	Each	146.0000	4	4	RT 11-10-18

RUBBER CUSHION

Location	Loc Qty	Loc Code	
LG	145		
70975	68		x4
74300	77		
LG055	1		
63368	1		

Dart Aerospace Ltd

W/O:		WORK ORDER CHANGES					
DATE	STEP	PROCEDURE CHANGE	By	Date	Qty	Approval Chief Eng / Prod Mgr	Approval QC Inspector

Part No: _____ **PAR #:** _____ **Fault Category:** _____ **NCR:** Yes No **DQA:** _____ **Date:** _____

Resolution: _____ **Disposition:** _____ **QA: N/C Closed:** _____ **Date:** _____

NCR:		WORK ORDER NON-CONFORMANCE (NCR)						
DATE	STEP	Description of NC Section A	Corrective Action Section B			Verification Section C	Approval Chief Eng	Approval QC Inspector
			Initial Chief Eng	Action Description Chief Eng	Sign & Date			

NOTE: Date & initial all entries

H:\FORMS\Quality Assurance\approved QA\NCRWO RevE

Picklist Print

Wednesday, October 05, 2011 10:24:40 AM

Work Order ID: 74686

Parent Item: D407-667-105

Parent Item Name: Crosstube Fwd

Start Date: 10/5/2011 **Required Date:** 10/21/2011

Start Qty: 1.00 **Required Qty:** 1.00

MS20601-AD4W10	Purchased	No	230	Each	135.0000	14	14	RT 11-10-15

RIVET

Location	Loc Qty	Loc Code	
LG051	135		
116186	3		x 3
117676	2		2
118464	30		x 14
118675	100		1

MS21920-20	Purchased	No	230	Each	62.0000	4	4	RT 11-10-15

Clamp (per MIL-DTL-8783C)

Location	Loc Qty	Loc Code	
LG050	62		
116799	10		
118236	6		
118649	46		x 4

AN5-10A	Purchased	No	250	Each	174.0000	10	10	11/10/198

Bolt

Location	Loc Qty	Loc Code	
ST337	174		
116704	16		3
117795	49		7
118191	59		
118983	50		

Dart Aerospace Ltd

W/O:		WORK ORDER CHANGES					
DATE	STEP	PROCEDURE CHANGE	By	Date	Qty	Approval Chief Eng / Prod Mgr	Approval QC Inspector

Part No: _____ **PAR #:** _____ **Fault Category:** _____ **NCR:** Yes No **DQA:** _____ **Date:** _____

Resolution: _____ **Disposition:** _____ **QA: N/C Closed:** _____ **Date:** _____

NCR:		WORK ORDER NON-CONFORMANCE (NCR)						
DATE	STEP	Description of NC Section A	Corrective Action Section B			Verification Section C	Approval Chief Eng	Approval QC Inspector
			Initial Chief Eng	Action Description Chief Eng	Sign & Date			

NOTE: Date & initial all entries

H:\FORMS\Quality Assurance\approved QA\NCRWO RevE

Picklist Print

Wednesday, October 05, 2011 10:24:40 AM

Work Order ID: 74686

Parent Item: D407-667-105

Parent Item Name: Crosstube Fwd

Start Date: 10/5/2011 **Required Date:** 10/21/2011

Start Qty: 1.00 **Required Qty:** 1.00

AN5-30A BOLT	Purchased	No	250	Each	78.0000	4	4	

Location	Loc Qty	Loc Code
ST339	78	
116003	2	
117514	11	
118451	15	
118706	50	

AN5-32A Bolt	Purchased	No	250	Each	183.0000	4	4	

Location	Loc Qty	Loc Code
ST339	75	
118628	50	
118983	25	
ST340	108	
117872	58	
118422	50	

AN960JD516 Washer	NAS1149D0563J	Purchased	No	250	Each	0.0000	18	18 M118206 11/10/11

Dart Aerospace Ltd

W/O:		WORK ORDER CHANGES					
DATE	STEP	PROCEDURE CHANGE	By	Date	Qty	Approval Chief Eng / Prod Mgr	Approval QC Inspector

Part No: _____ **PAR #:** _____ **Fault Category:** _____ **NCR:** Yes No **DQA:** _____ **Date:** _____

Resolution: _____ **Disposition:** _____ **QA: N/C Closed:** _____ **Date:** _____

NCR:		WORK ORDER NON-CONFORMANCE (NCR)						
DATE	STEP	Description of NC Section A	Corrective Action Section B			Verification Section C	Approval Chief Eng	Approval QC Inspector
			Initial Chief Eng	Action Description Chief Eng	Sign & Date			

NOTE: Date & initial all entries

H:\fFORMS\Quality Assurance\approved QA\NCRWO RevE

Picklist Print

Wednesday, October 05, 2011 10:24:41 AM

Work Order ID: 74686

Parent Item: D407-667-105

Parent Item Name: Crosstube Fwd

Start Date: 10/5/2011 **Required Date:** 10/21/2011

Start Qty: 1.00 **Required Qty:** 1.00

MS21042L5	Purchased	No	250	Each	2,684.000	4	4	11/10/198

Nut

Location	Loc Qty	Loc Code
ST300	1184	
116105	5	
116548	53	
117441	248	
117611	82	
118179	496	
118910	300	
ST518	1500	
119109	1500	

Dart Aerospace Ltd

W/O:		WORK ORDER CHANGES					
DATE	STEP	PROCEDURE CHANGE	By	Date	Qty	Approval Chief Eng / Prod Mgr	Approval QC Inspector

Part No: _____ **PAR #:** _____ **Fault Category:** _____ **NCR:** Yes No **DQA:** _____ **Date:** _____

Resolution: _____ **Disposition:** _____ **QA: N/C Closed:** _____ **Date:** _____

NCR:		WORK ORDER NON-CONFORMANCE (NCR)						
DATE	STEP	Description of NC Section A	Corrective Action Section B			Verification Section C	Approval Chief Eng	Approval QC Inspector
			Initial Chief Eng	Action Description Chief Eng	Sign & Date			

NOTE: Date & initial all entries

H:\fFORMS\Quality Assurance\approved QA\NCRWO RevE

DART AEROSPACE LTD	Work Order:	74686
Description: Crosstube High Fwd (407)	**Part Number:**	**D407-667-105**
Inspection Dwg: D407-667-145 **Rev:** C		**Page 1 of 1**

Required Dimension	Min	Max
Height	23.41	23.67
1/2 Span	45.81	46.07
Angle	54	56
Total Span	91.63	92.13

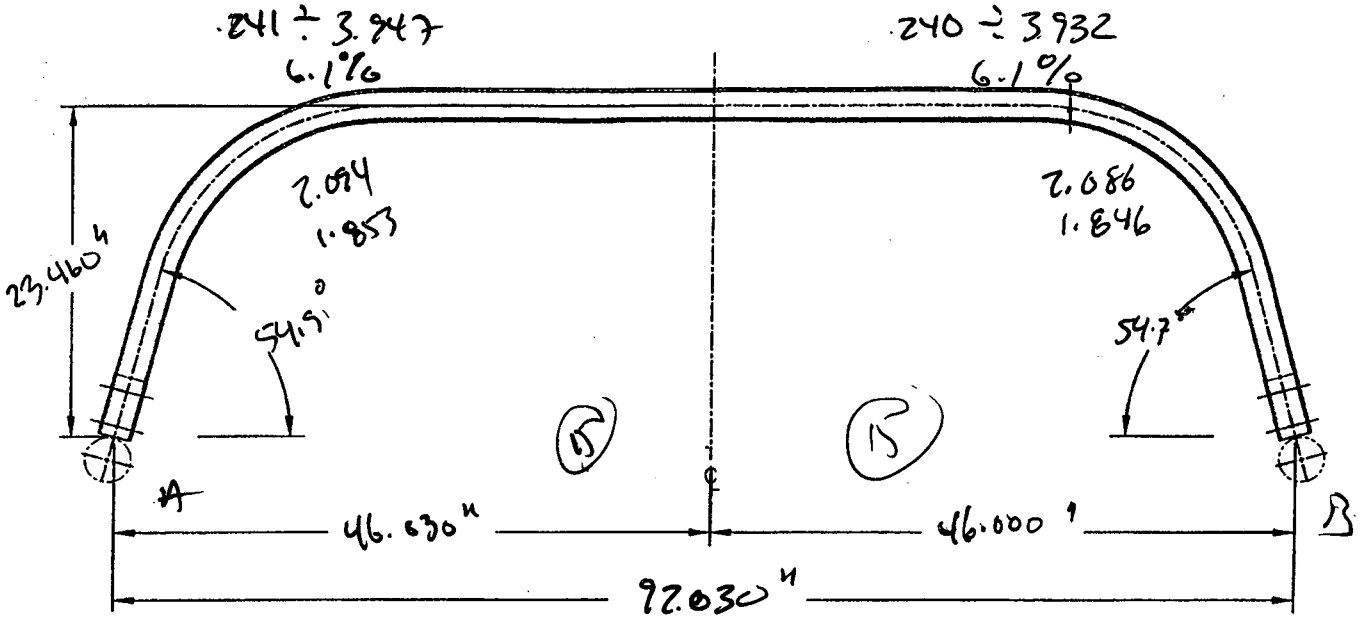

Comments
Side A = 6.1% crushi @ 15 passes
Side B = 6.1% crushi @ 15 passes
CRUSHING ACCEPTABLE CP 11.10.13 AS 1042

QC15 Inspection	
Date	11/10/13

Rev	Date	Change	Revised by	Approved
A	07.02.06	New Issue	KJ/JM	
B	09.11.12	Dimensions updated per Dwg Rev C	KJ	

Dart Aerospace Ltd

W/O:		WORK ORDER CHANGES					
DATE	STEP	PROCEDURE CHANGE	By	Date	Qty	Approval Chief Eng / Prod Mgr	Approval QC Inspector

Part No: _____ **PAR #:** _____ **Fault Category:** _____ **NCR:** Yes No **DQA:** _____ **Date:** _____

Resolution: _____ **Disposition:** _____ **QA: N/C Closed:** _____ **Date:** _____

NCR:		WORK ORDER NON-CONFORMANCE (NCR)						
DATE	STEP	Description of NC Section A	Corrective Action Section B			Verification Section C	Approval Chief Eng	Approval QC Inspector
			Initial Chief Eng	Action Description Chief Eng	Sign & Date			

NOTE: Date & initial all entries

H:\FORMS\Quality Assurance\approved QA\NCRWO RevE

Item	Qty -145	Part Number	Description
1	X	D407-667-145	CROSSTUBE ASSEMBLY (407 HIGH FWD)
2	1	D6010-115	CROSSTUBE
3	2	D2873-043	NUT PLATE
4	2	D2873-045	NUT PLATE
5	2	D2891-1	SUPPORT
6	4	D3595-063-395	RUBBER CUSHION
7	4	MS21920-20	CLAMP (OR MS21920-21)
8	14	MS20601AD4W10	RIVET (OR NAS9302B-4-10)
9	A/R	MAGNOBOND 6398	ROCKWELL SPECIFICATION RBO-120-023 ADHESIVE (TEXTRON/BELL SPEC. 299-947-100, TYPE II, CLASS 2 ADHESIVE)

SHOP COPY
RETURN TO
ENGINEERING
UNCONTROLLED COPY
SUBJECT TO AMENDMENT
WITHOUT NOTICE
WORK ORDER
NO. 746816 M.L.J
11/10/05

DEO ATTACHED

ECN #11-615
11.07.26

UNDER REVIEW
11.16.12

RELEASED
05/11/12 MB

GENERAL NOTES:

1) MATERIAL: MANUFACTURED FROM D6010-115
   FINISHED LENGTH = 113.20±0.020
2) FINISH: CHEMICAL CONVERSION COAT PER DART QSI 005 4.1
   PRIME INSIDE AND OUTSIDE PER DART QSI 005 4.2
   PAINT OUTSIDE PER DART QSI 005 4.2
3) TOLERANCES ARE PER DART QSI 018 UNLESS OTHERWISE NOTED.
4) UNITS: INCHES UNLESS OTHERWISE NOTED.
5) BREAK SHARP EDGES: 0.005 TO 0.010 MAX.
6) IDENTIFICATION: SCRIBE DART PART NUMBER "D407-667-145" AND BATCH NUMBER ON INSIDE OF CUFF USING VIBRATING STYLUS.
7) WEIGHT: 17.8 lbs
8) PART IS SYMMETRIC ABOUT CENTERLINE.
9) RUN CUTTER OFF PART WHERE INDICATED. BLEND OUT EDGE LONGITUDINALLY, TRANSITION SHOULD BE SMOOTH.
10) BEND PROGRESSIVELY WITH A MINIMUM OF 6 PASSES. MAXIMUM TUBE FLATTENING DUE TO BENDING IS 6% BASED ON O.D.
11) LIQUID PENETRANT INSPECT OUTSIDE SURFACE OF CROSSTUBE PER QSI 038.
12) INSTALL D2891-1 SUPPORT USING 0.03" TO 0.06" THICK LAYER OF MAGNOBOND 6398 PER QSI 015. LET CURE FOR 12 HOURS AFTER INSTALLATION AND PRIOR TO PACKAGING.
13) INSTALL MS21920-20 CLAMPS (OR -21) WITH D3595-063-395 RUBBER CUSHIONS TO SECURE THE D2891-1 SUPPORT ON TOP SIDE OF THE CROSSTUBE. ENSURE CLAMP MECHANISMS ARE LOCATED ON CROSSTUBE SUPPORTS.
14) EXTREME CARE MUST BE TAKEN TO PROTECT THE OUTSIDE SURFACE OF THE TUBE. THE OUTSIDE SURFACE MUST BE SMOOTH AND FREE FROM SURFACE DEFECTS SUCH AS SCRATCHES, NICKS, OR DENTS. DEFECTS UP TO 0.005" MAY BE BLENDED OUT LONGITUDINALLY. CIRCUMFERENTIAL GRIND MARKS ARE UNACCEPTABLE.
15) TORQUE CLAMPS 80 TO 100 IN-LB. ENSURE AT LEAST 1.5 THREADS ARE SHOWING IN SAFETY AND THAT NUT HAS NOT BOTTOMED-OUT AFTER TORQUING.

REV.	DESCRIPTION	BY	DATE
C	REVISE GENERAL NOTES/PART LIST (ZN D7-1); REORGANIZED VIEWS AND REFORMATTED DRAWING TO CURRENT STANDARDS. D3595-063-395 WAS D2856-400-694 (ZN D6-2 & A5-2); REMOVED REF. 7 ADD TOLERANCES (ZN C6-3, C4-3, D2-3); RELOCATED FLAG #6 (ZN A8-3) PER NCR 210; MOVED TURNING DETAIL & UPDATED TOLERANCE TO SHEET 4.	RF	08.11.06
B	ADD HOLES AND NUT PLATES FOR COMPATABILITY WITH BHT/AA SKUDTUBES	PH	05.07.26
A	NEW ISSUE	CP	02.05.08

DESIGN		**DART AEROSPACE LTD** HAWKESBURY, ONTARIO, CANADA
DRAWN	RF	
CHECKED		DRAWING NO. D407-667-145 — REV. C — SHEET 1 OF 4
MFG. APPR.		
APPROVED		TITLE: CROSSTUBE ASS'Y (407 HIGH FWD) — SCALE: NTS
DE APPR.		
DATE	08.11.06	

COPYRIGHT © 2002 BY DART AEROSPACE LTD
THIS DOCUMENT IS PRIVATE AND CONFIDENTIAL AND IS SUPPLIED ON THE EXPRESS CONDITION THAT IT IS NOT TO BE USED FOR ANY PURPOSE OR COPIED OR COMMUNICATED TO ANY OTHER PERSON WITHOUT WRITTEN PERMISSION FROM DART AEROSPACE LTD.

Dart Aerospace Ltd

W/O:		WORK ORDER CHANGES					
DATE	STEP	PROCEDURE CHANGE	By	Date	Qty	Approval Chief Eng / Prod Mgr	Approval QC Inspector

Part No: _____ **PAR #:** _____ **Fault Category:** _____ **NCR:** Yes No **DQA:** _____ **Date:** _____

Resolution: _____ **Disposition:** _____ **QA: N/C Closed:** _____ **Date:** _____

NCR:		WORK ORDER NON-CONFORMANCE (NCR)						
DATE	STEP	Description of NC Section A	Corrective Action Section B			Verification Section C	Approval Chief Eng	Approval QC Inspector
			Initial Chief Eng	Action Description Chief Eng	Sign & Date			

NOTE: Date & initial all entries

H:\fFORMS\Quality Assurance\approved QA\NCRWO RevE

74686

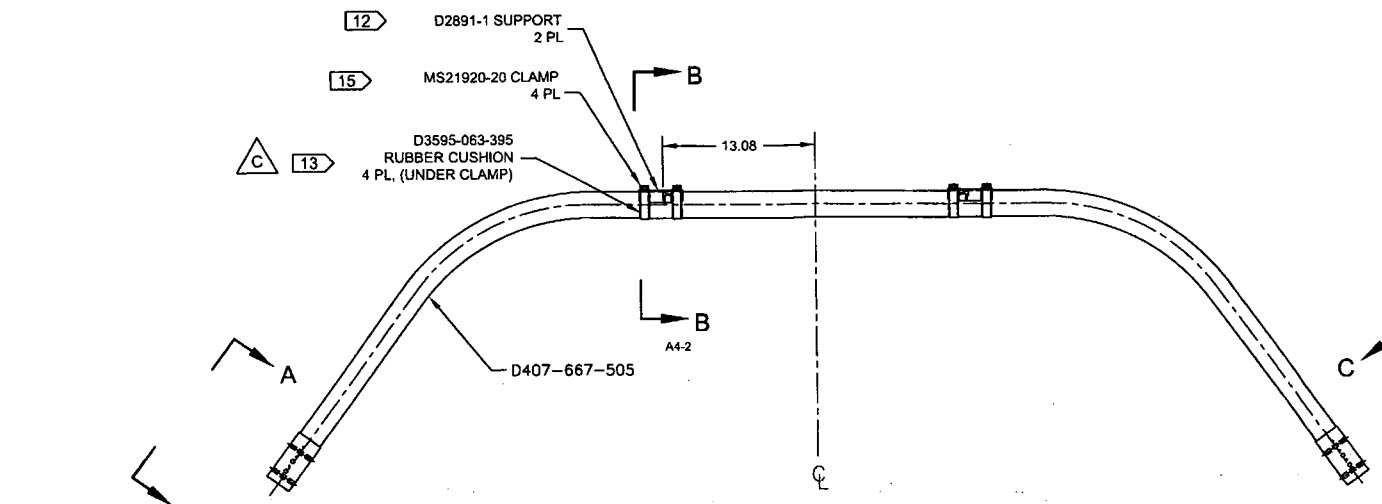

ECO #11.615
11.07.28

UNDER REVIEW
9/1/06.13

RELEASED
08/1/12

DEO ATTACHED

C D407-667-145
ASSEMBLY DETAIL
(VIEW LOOKING FWD)

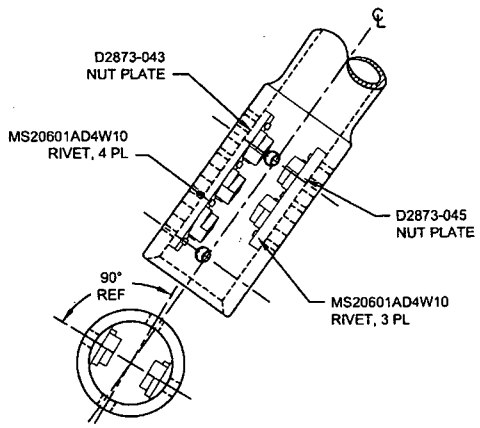

C7-2 VIEW A-A:
CUFF DETAIL
SCALE 4X

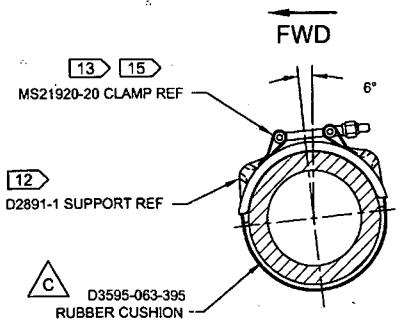

D5-2 SECTION B-B
SCALE 5X

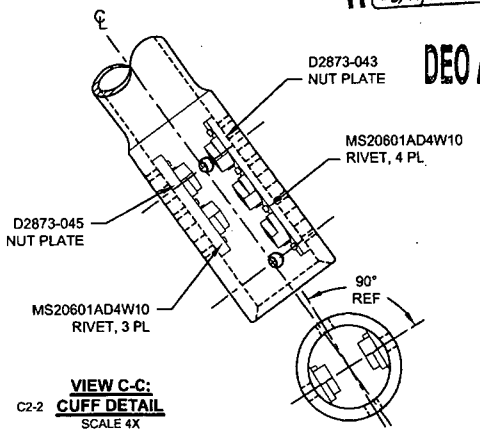

C2-2 VIEW C-C:
CUFF DETAIL
SCALE 4X

DESIGN		DART AEROSPACE LTD HAWKESBURY, ONTARIO, CANADA	
DRAWN	RF		
CHECKED		DRAWING NO.	REV. C
MFG. APPR.		D407-667-145	SHEET 2 OF 4
APPROVED		TITLE	SCALE
DE APPR.		CROSSTUBE ASS'Y (407 HIGH FWD)	NTS
DATE	08.11.06		

COPYRIGHT © 2002 BY DART AEROSPACE LTD
THIS DOCUMENT IS PRIVATE AND CONFIDENTIAL AND IS SUPPLIED ON THE EXPRESS CONDITION THAT IT IS NOT TO BE USED FOR ANY PURPOSE OR COPIED OR COMMUNICATED TO ANY OTHER PERSON WITHOUT WRITTEN PERMISSION FROM DART AEROSPACE LTD.

Dart Aerospace Ltd

W/O:		WORK ORDER CHANGES					
DATE	STEP	PROCEDURE CHANGE	By	Date	Qty	Approval Chief Eng / Prod Mgr	Approval QC Inspector

Part No: _____ PAR #: _____ Fault Category: _____ NCR: Yes No DQA: _____ Date: _____

Resolution: _____ Disposition: _____ QA: N/C Closed: _____ Date: _____

NCR:		WORK ORDER NON-CONFORMANCE (NCR)						
DATE	STEP	Description of NC Section A	Corrective Action Section B			Verification Section C	Approval Chief Eng	Approval QC Inspector
			Initial Chief Eng	Action Description Chief Eng	Sign & Date			

NOTE: Date & initial all entries

H:\fFORMS\Quality Assurance\approved QA\NCRWO RevE

74686

UNDER REVIEW
11.06.13
ECN #11615
11.07.08

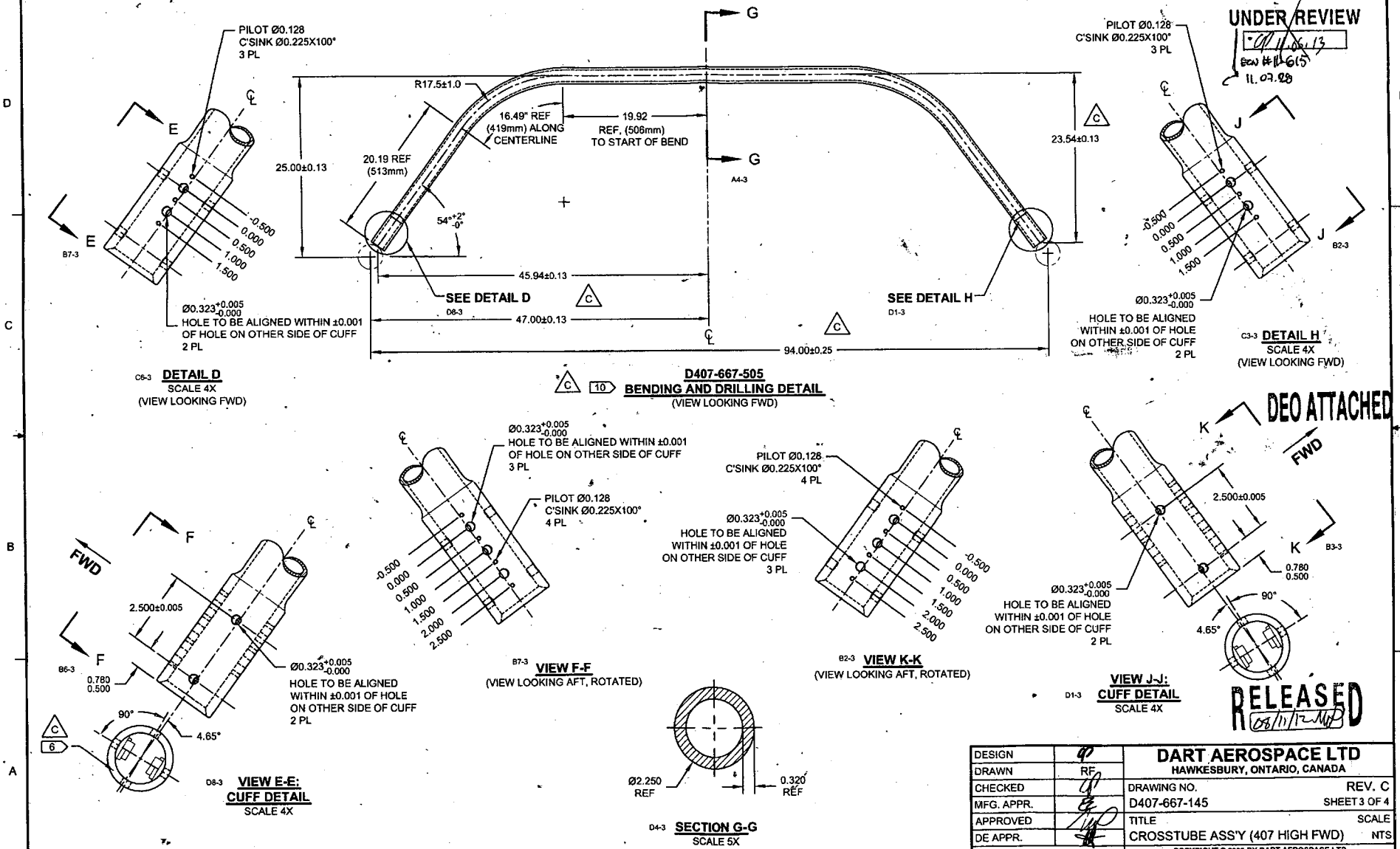

C6-3 **DETAIL D**
SCALE 4X
(VIEW LOOKING FWD)

D407-667-505
BENDING AND DRILLING DETAIL
(VIEW LOOKING FWD)

C3-3 **DETAIL H**
SCALE 4X
(VIEW LOOKING FWD)

D8-3 **VIEW E-E: CUFF DETAIL**
SCALE 4X

B7-3 **VIEW F-F**
(VIEW LOOKING AFT, ROTATED)

B2-3 **VIEW K-K**
(VIEW LOOKING AFT, ROTATED)

D1-3 **VIEW J-J: CUFF DETAIL**
SCALE 4X

D4-3 **SECTION G-G**
SCALE 5X

DESIGN		**DART AEROSPACE LTD** HAWKESBURY, ONTARIO, CANADA
DRAWN	RF	
CHECKED		DRAWING NO. D407-667-145 — REV. C — SHEET 3 OF 4
MFG. APPR.		
APPROVED		TITLE: CROSSTUBE ASS'Y (407 HIGH FWD) — SCALE: NTS
DE APPR.		
DATE	08.11.06	

COPYRIGHT © 2002 BY DART AEROSPACE LTD
THIS DOCUMENT IS PRIVATE AND CONFIDENTIAL AND IS SUPPLIED ON THE EXPRESS CONDITION THAT IT IS NOT TO BE USED FOR ANY PURPOSE OR COPIED OR COMMUNICATED TO ANY OTHER PERSON WITHOUT WRITTEN PERMISSION FROM DART AEROSPACE LTD.

Dart Aerospace Ltd

W/O:		WORK ORDER CHANGES					
DATE	STEP	PROCEDURE CHANGE	By	Date	Qty	Approval Chief Eng / Prod Mgr	Approval QC Inspector

Part No: _____ **PAR #:** _____ **Fault Category:** _____ **NCR:** Yes No **DQA:** _____ **Date:** _____

Resolution: _____ **Disposition:** _____ **QA: N/C Closed:** _____ **Date:** _____

NCR:		WORK ORDER NON-CONFORMANCE (NCR)						
DATE	STEP	Description of NC Section A	Corrective Action Section B			Verification Section C	Approval Chief Eng	Approval QC Inspector
			Initial Chief Eng	Action Description Chief Eng	Sign & Date			

NOTE: Date & initial all entries

H:\fFORMS\Quality Assurance\approved QA\NCRWO RevE

74686

UNDER REVIEW
CP 11.08.13
BCN #11.615
11.07.28

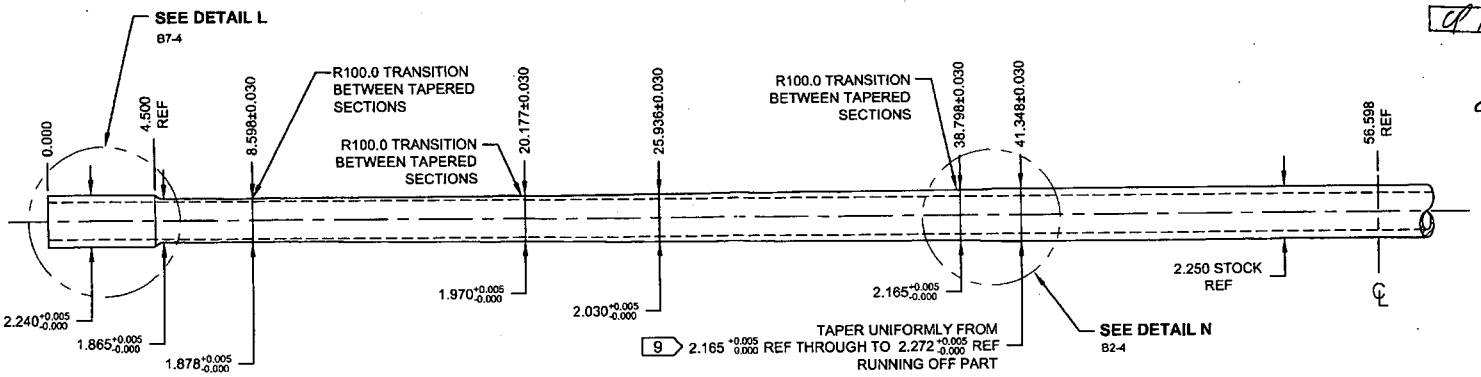

C TURNING DETAIL

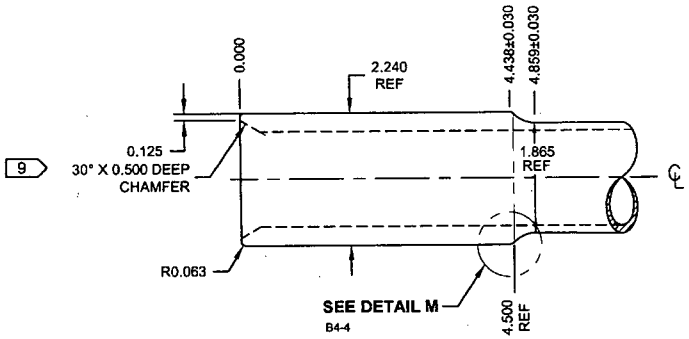

D7-4 **DETAIL L: CROSSTUBE CUFF**
NOT TO SCALE

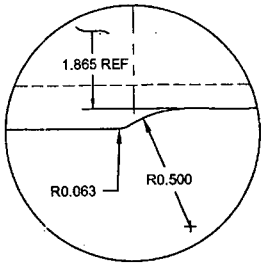

D6-4 **DETAIL M: CUFF TRANSITION**
NOT TO SCALE

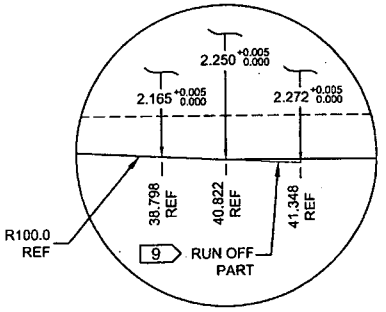

C3-4 **DETAIL N: TAPER RUN-OFF**
NOT TO SCALE

DEO ATTACHED

RELEASED
08/11/13

DESIGN		DART AEROSPACE LTD HAWKESBURY, ONTARIO, CANADA
DRAWN	RF	
CHECKED		DRAWING NO. REV. C
MFG. APPR.		D407-667-145 SHEET 4 OF 4
APPROVED		TITLE SCALE
DE APPR.		CROSSTUBE ASS'Y (407 HIGH FWD) NTS
DATE	08.11.06	

COPYRIGHT © 2002 BY DART AEROSPACE LTD
THIS DOCUMENT IS PRIVATE AND CONFIDENTIAL AND IS SUPPLIED ON THE EXPRESS CONDITION THAT IT IS NOT TO BE USED FOR ANY PURPOSE OR COPIED OR COMMUNICATED TO ANY OTHER PERSON WITHOUT WRITTEN PERMISSION FROM DART AEROSPACE LTD.

Dart Aerospace Ltd

W/O:		WORK ORDER CHANGES					
DATE	STEP	PROCEDURE CHANGE	By	Date	Qty	Approval Chief Eng / Prod Mgr	Approval QC Inspector

Part No: _____ **PAR #:** _____ **Fault Category:** _____ **NCR:** Yes No **DQA:** _____ **Date:** _____

Resolution: _____ **Disposition:** _____ **QA: N/C Closed:** _____ **Date:** _____

NCR:		WORK ORDER NON-CONFORMANCE (NCR)						
DATE	STEP	Description of NC Section A	Corrective Action Section B			Verification Section C	Approval Chief Eng	Approval QC Inspector
			Initial Chief Eng	Action Description Chief Eng	Sign & Date			

NOTE: Date & initial all entries

H:\fFORMS\Quality Assurance\approved QA\NCRWO RevE

74686

DRAWING NO.	TITLE	REV. C	DART AEROSPACE LTD ENGINEERING ORDER	D.E.O. NO.	SHEET NO.	SCALE
D407-667-145	CROSSTUBE ASS'Y (407 HIGH FWD)			D407-667-145-C-1	SHEET 1 OF 1	NTS

DRAWN	CHECKED	MFG. APPR.	APPROVED	DE APPR.
qp	ASS			
DATE 11.07.15	DATE 11.07.22	DATE 11.07.22	DATE 11/07/22	DATE 11.07.21

PURPOSE:
REPLACE MAGNOBOND WITH PROSEAL.

CHANGE:

IS:

Item	Qty -145	Part Number	Description
9	A/R	PROSEAL 890 B-2	SEALANT, AMS-S-8802 CLASS B-2

WAS:

9	A/R	MAGNOBOND 6398	ROCKWELL SPECIFICATION RBO-120-023 ADHESIVE (TEXTRON/BELL SPEC. 299-947-100, TYPE II, CLASS 2 ADHESIVE)

NOTE 12 & 15, SHEET 1 IS AMENDED AS FOLLOWS:

IS:

12) TO INSTALL D2891-1 SUPPORT: ABRADE MATING SURFACE OF SUPPORT AND CROSSTUBE WITH 180-GRIT SANDPAPER AND REMOVE RESIDUE WITH MEK (OR EQUIVALENT). APPLY A 0.04" TO 0.07" THICK LAYER OF PROSEAL 890 CLASS B-2 (OR AMS-S-8802 CLASS B-2) SEALANT TO MATING SURFACE OF SUPPORT.

15) TORQUE CLAMPS 80 TO 100 IN-LB. ENSURE AT LEAST 1.5 THREADS SHOWING IN SAFETY AND THAT NUT HAS NOT BOTTOMED-OUT AFTER TORQUING. **PRIOR TO PACKAGING, RE-CHECK TORQUE ON CLAMPS AFTER PROSEAL 890 SEALANT HAS CURED FOR 72 HOURS.**

WAS:

12) INSTALL D2891-1 SUPPORT USING 0.03" TO 0.06" THICK LAYER OF MAGNOBOND 6398 PER QSI 015. LET CURE FOR 12 HOURS AFTER INSTALLATION AND PRIOR TO PACKAGING.

15) TORQUE CLAMPS 80 TO 100 IN-LB. ENSURE AT LEAST 1.5 THREADS SHOWING IN SAFETY AND THAT NUT HAS NOT BOTTOMED-OUT AFTER TORQUING.

RELEASED 2011-07-28

COPYRIGHT © 2011 BY DART AEROSPACE LTD
THIS DOCUMENT IS PRIVATE AND CONFIDENTIAL AND IS SUPPLIED ON THE EXPRESS CONDITION THAT IT IS NOT TO BE USED FOR ANY PURPOSE OR COPIED OR COMMUNICATED TO ANY OTHER PERSON WITHOUT WRITTEN PERMISSION FROM DART AEROSPACE LTD.

Dart Aerospace Ltd

W/O:		WORK ORDER CHANGES					
DATE	STEP	PROCEDURE CHANGE	By	Date	Qty	Approval Chief Eng / Prod Mgr	Approval QC Inspector

Part No: _____ **PAR #:** _____ **Fault Category:** _____ **NCR:** Yes No **DQA:** _____ **Date:** _____

Resolution: _____ **Disposition:** _____ **QA: N/C Closed:** _____ **Date:** _____

NCR:		WORK ORDER NON-CONFORMANCE (NCR)						
DATE	STEP	Description of NC Section A	Corrective Action Section B			Verification Section C	Approval Chief Eng	Approval QC Inspector
			Initial Chief Eng	Action Description Chief Eng	Sign & Date			

NOTE: Date & initial all entries

H:\FORMS\Quality Assurance\approved QA\NCRWO RevE

ACUREN

LIQUID PENETRANT TEST REPORT

P- 05634

PAGE 1 OF 1

CLIENT: DART AEROSPACE
ATTENTION: LINDA/CHANTAL/IAN/MATT
ADDRESS: 1270, ABERDEEN ST. HAWKESBURY, ON

DATE: OCT-14-2011 TIME: AM ☑ PM ☐
ACUREN JOB NO.: 188-11-02196
PO/WO NO.: 15157
WORK LOCATION: AS ADDRESS
ACCEPTANCE STD.: ASTM/MIL/CSI 058 REV./DATE: 2005

PROJECT: PT → WET FLUORESCENT LIQUID PENETRANT ON "CROSSTUBES"

ITEM(S) EXAMINED: — SEE BELOW —

JOB DESCRIPTION | PROCEDURE NO. LT-002 REV./DATE 2007 | TECHNIQUE NO. LT-002 REV./DATE 2007

PART NO.: | MATERIAL: ALODINE ALUMINUM | THICKNESS:

SCOPE: PERFORMED A WET FLUORESCENT LIQUID PENETRANT INSPECTION ON 100% OF THE EXTERNAL SURFACE ON ITEMS MENTIONED BELOW

TEST DETAILS

METHOD	☑ FLUORESCENT ☐ VISIBLE				☑ WATER WASH ☐ SOLVENT REMOVABLE ☐ POST EMULSIFIED
FAMILY BRAND	MAGNAFLUX				BLACK LIGHT S/N 13798 ☑ OUTPUT > 1000 μ W/CM² ☐ AMBIENT < 2 fc
PENETRANT	ZL-67	MINIMUM DWELL TIME	10	MIN.	LIGHTING EQUIP. ☐ FLASHLIGHT ☐ TROUBLELIGHT ☐ OUTPUT>100 fc @ SURFACE
PENETRANT REMOVER	H_2O	MINIMUM DRY TIME	>10	MIN.	OTHER
DEVELOPER	SKD-S2	MINIMUM DWELL TIME	10	MIN.	LIGHT METER S/N — CAL DUE DATE AUG-2011
DEVELOPER TYPE	☑ NON AQUEOUS ☐ AQUEOUS ☐ DRY				

TEST SURFACE

SURFACE CONDITION: ☐ AS GROUND ☐ AS WELDED ☐ MACHINED ☐ SHOT BLASTED ☑ CLEAN BARE METAL

SURFACE TEMPERATURE: ☐ < - 4°C/ 20°F ☐ - 4°C/ 20°F TO 10°C/50°F ☑ 10°C/50°F TO 52°C/125°F ☐ > 52°C/125°F

RESULTS- (☐ METRIC ☐ IMPERIAL)

	CROSSTUBE W.O. ID		ITEM ID	
1	72417	✓	D212-664-201	AFT
2	72418	✓	D212-664-201	AFT
3	73042	✓	D212-664-101	FWD
4	73690	✓	D412-664-203	AFT
5	73691	✓	D412-664-203	AFT
6	74330	✓	D412-664-101	FWD
7	74686	✓	D407-667-105	FWD
8	74687	✓	D407-667-105	FWD

NO RELEVANT INDICATION WAS DETECTED AS PER APPLICABLE STANDARDS.

RT 11-10-15

Scope of Services
The agreement of Acuren Group Inc. to perform services extends only to those services provided for in writing. Under no circumstances shall such services extend beyond the performance of the requested services. It is expressly understood that all descriptions, comments and expressions of opinion reflect the opinions or observations of Acuren Group Inc. based on information and assumptions supplied by the owner/operator and are not intended nor can they be construed as representations or warranties. Acuren Group Inc. is not assuming any responsibilities of the owner/operator and the owner/operator retains complete responsibility for the engineering, manufacture, repair and use decisions as a result of data or other information provided by Acuren Group Inc. In no event shall Acuren Group Inc.'s liability in respect of the services referred to herein exceed the amount paid for such services.
Standard of Care
In performing the services provided, Acuren Group Inc. uses the degree, care and skill ordinarily exercised under similar circumstances by others performing such services in the same or similar locality. No other warranty, expressed or implied, is made or intended by Acuren Group Inc.

SIGNATURES

CLIENT REPRESENTATIVE: Ian Tilley (PRINT) — (SIGNATURE)

TECHNICIAN (SIGNATURE):

NAME (PRINT): JULES DESROCHERS

1st TECHNICIAN: CGSB LEVEL 2 SNT LEVEL 3 CGSB REG. NO 3049

2ND TECHNICIAN: CGSB LEVEL ____ SNT LEVEL ____ CGSB REG. NO ____

DTR # E 44768

REPORT REVIEWED BY: NAME INITIALS

WHITE – CLIENT COPY CANARY – OFFICE COPY PINK – TECHNICIAN COPY GOLD – OFFICE COPY